AP® Art History
2014 Image-Based Multiple-Choice Questions and Free-Response Questions

© 2014 The College Board. College Board, Advanced Placement Program, AP, AP Central, and the acorn logo are registered trademarks of the College Board.
Visit the College Board on the Web: www.collegeboard.org.
AP Central is the official online home for the AP Program: apcentral.collegeboard.org.

CollegeBoard

ART HISTORY
SECTION I—Part A
Time—20 minutes
35 Questions

Directions: Questions 1-35 are divided into five sets of questions based on color images shown in the orange booklet for Section I: Multiple Choice, Part A, Images. Each set is based on one or two images. In the sets, each of the questions or incomplete statements is followed by four suggested answers or completions. Select the one that is best in each case and fill in the corresponding circle on the answer sheet.

You will have twenty minutes to answer the questions in Part A, and you are advised to spend four minutes on each set of questions. The proctor will announce when each four-minute interval has elapsed, but you may proceed freely from one set to the next.

Note: This exam uses the chronological designations B.C.E. (before the common era) and C.E. (common era). These labels correspond to B.C. (before Christ) and A.D. (anno Domini), which are used in some art history textbooks.

Questions 1-7 refer to the corresponding color image shown in the orange booklet.

1. The work is by
   (A) Masaccio
   (B) Michelangelo
   (C) Leonardo da Vinci
   (D) Andrea del Castagno

2. The work is a
   (A) wall painting
   (B) panel painting
   (C) manuscript illumination
   (D) tapestry

3. The work is located in a
   (A) ducal palace
   (B) papal chapel
   (C) monastic refectory
   (D) city hall

4. The artist experimented with the work's
   (A) placement
   (B) iconography
   (C) materials
   (D) size

5. The work incorporates
   (A) hierarchical scale
   (B) linear perspective
   (C) elongated proportions
   (D) strident colors

6. The work depicts the
   (A) Feast in the House of Levi
   (B) Last Supper
   (C) Marriage at Cana
   (D) Supper at Emmaus

7. The narrative moment is expressed through the
   (A) gestures
   (B) textual gloss
   (C) color palette
   (D) lighting

© 2014 The College Board.
Visit the College Board on the Web: www.collegeboard.org.

QUESTIONS 1-7: IMAGE

© The Bridgeman Art Library

© 2014 The College Board.
Visit the College Board on the Web: www.collegeboard.org.

Questions 8-14 refer to the corresponding images shown in the orange booklet.

The images show two views of the same building.

8. The building is located in

   (A) Athens
   (B) Florence
   (C) Rome
   (D) Istanbul

9. The building was originally used as a

   (A) marketplace
   (B) tomb
   (C) temple
   (D) bathhouse

10. The building was converted into a

    (A) theater
    (B) church
    (C) residence
    (D) mosque

11. The original patron of the building was

    (A) a pope
    (B) a merchant
    (C) an emperor
    (D) a caliph

12. The dome of the building is primarily constructed of

    (A) concrete
    (B) marble
    (C) wood
    (D) bronze

13. The coffers in the dome were intended to

    (A) lessen its overall weight
    (B) enhance its acoustics
    (C) reflect light from above
    (D) contrast with the building's floor

14. The term for the central opening in the dome is

    (A) a lantern
    (B) an oculus
    (C) an impluvium
    (D) a clerestory

© 2014 The College Board.
Visit the College Board on the Web: www.collegeboard.org.

QUESTIONS 8-14: LEFT IMAGE

© Vanni Archive / Art Resource, NY

© 2014 The College Board.
Visit the College Board on the Web: www.collegeboard.org.

QUESTIONS 8-14: RIGHT IMAGE

© Ocean / Corbis

© 2014 The College Board.
Visit the College Board on the Web: www.collegeboard.org.

Questions 15-21 refer to the corresponding color image shown in the orange booklet.

15. The work is

(A) Sumerian
(B) Babylonian
(C) Akkadian
(D) Assyrian

16. The type of work is called a

(A) palette
(B) stele
(C) obelisk
(D) pylon

17. The medium of the work is

(A) metal
(B) stone
(C) wood
(D) clay

18. The work employs

(A) hierarchical scale
(B) continuous narrative
(C) one-point perspective
(D) aniconic representation

19. The two figures portray a

(A) king and his chief priest
(B) pharaoh and his scribe
(C) god and a king
(D) high priest and a warrior

20. The inscribed text outlines

(A) rituals in preparation for the afterlife
(B) laws governing crime and punishment
(C) historical accounts of military triumphs
(D) ceremonial prayers to the gods

21. The work serves to legitimize the

(A) invasion of neighboring city-states
(B) king's right to rule
(C) institution of monotheism
(D) authority of the priests

© 2014 The College Board.
Visit the College Board on the Web: www.collegeboard.org.

QUESTIONS 15-21: IMAGE

© The Gallery Collection / Corbis)

© 2014 The College Board.
Visit the College Board on the Web: www.collegeboard.org.

Questions 22-28 refer to the corresponding images shown in the orange booklet.

22. The church is located in

    (A) Toulouse, France
    (B) Milan, Italy
    (C) Florence, Italy
    (D) Durham, England

23. The church is constructed in the architectural style known as

    (A) Byzantine
    (B) Romanesque
    (C) Gothic
    (D) Renaissance

24. The view of the nave shows

    (A) a triforium
    (B) pointed arches
    (C) pendentives
    (D) engaged columns

25. The type of vaulting used in the nave is

    (A) corbeled vaulting
    (B) barrel vaulting
    (C) fan vaulting
    (D) sexpartite vaulting

26. According to the plan, the church's ambulatory allowed access to its

    (A) atrium
    (B) chapels
    (C) sacristy
    (D) narthex

27. The plan demonstrates that the church is a

    (A) baptistery
    (B) private chapel
    (C) pilgrimage church
    (D) central-plan church

28. All of the following architectural features were used in the church EXCEPT a

    (A) crossing
    (B) nave arcade
    (C) dome
    (D) transept

© 2014 The College Board.
Visit the College Board on the Web: www.collegeboard.org.

QUESTIONS 22-28: LEFT IMAGE

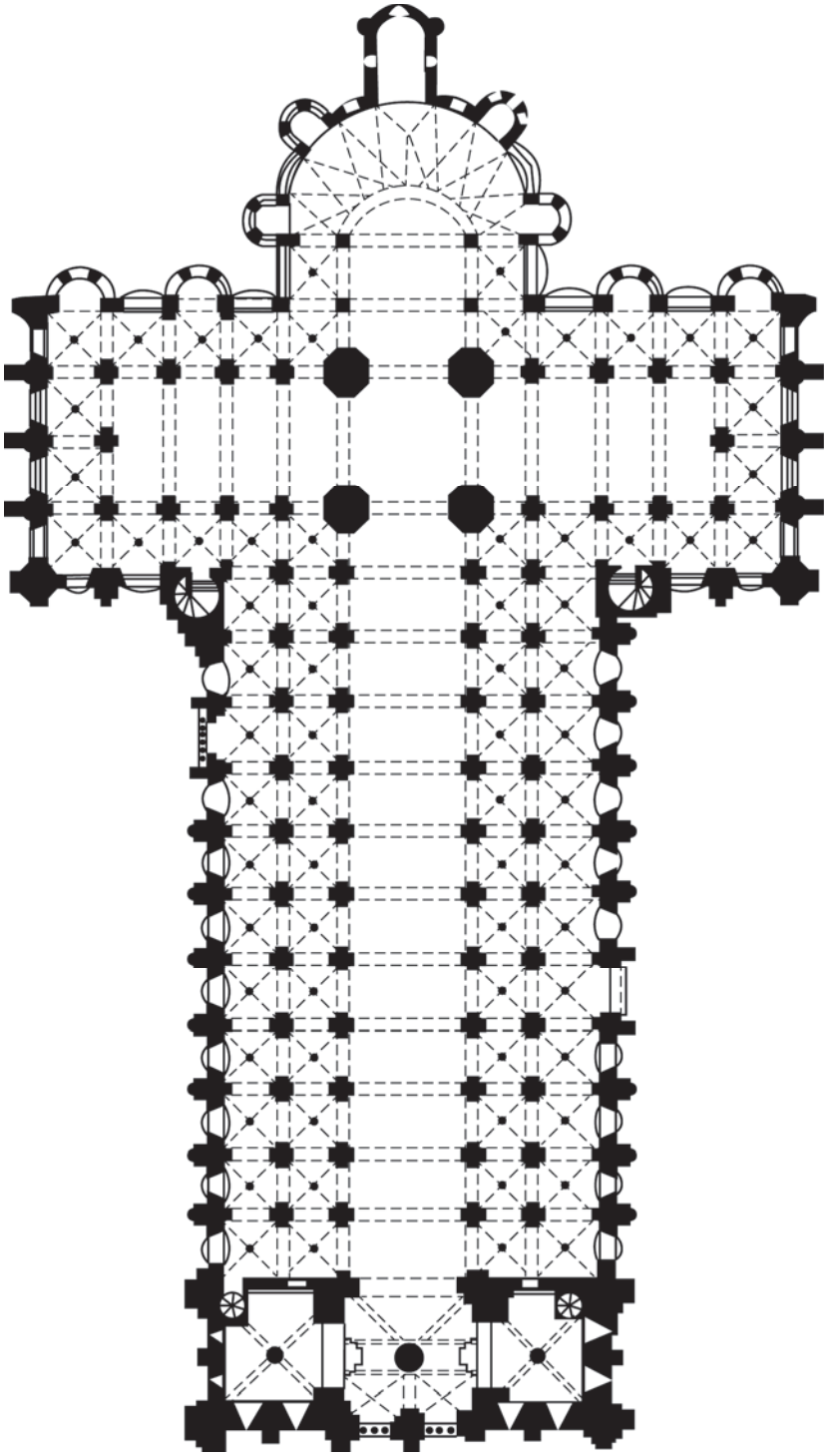

© 2014 The College Board.
Visit the College Board on the Web: www.collegeboard.org.

QUESTIONS 22-28: RIGHT IMAGE

© age fotostock

© 2014 The College Board.
Visit the College Board on the Web: www.collegeboard.org.

Questions 29-35 refer to the corresponding color image shown in the orange booklet.

29. The artist who created the painting is

    (A) Pablo Picasso
    (B) Robert Delaunay
    (C) Fernand Léger
    (D) Henri Matisse

30. The painting was created between

    (A) 1880 and 1900
    (B) 1901 and 1920
    (C) 1921 and 1940
    (D) 1941 and 1960

31. The artist used all of the following features in the work EXCEPT

    (A) planes that dissolve into each other
    (B) a clear relationship between figure and ground
    (C) incorporation of text
    (D) a subdued palette

32. The work reflects the artist's interest in

    (A) dream imagery
    (B) spirituality
    (C) a single light source
    (D) multiple viewpoints

33. An artist whose work was a catalyst for this artist's development was

    (A) Edvard Munch
    (B) Georges Seurat
    (C) Paul Cézanne
    (D) Vassily Kandinsky

34. The style of the painting is

    (A) Expressionist
    (B) Cubist
    (C) Pointillist
    (D) Futurist

35. Which of the following artists also worked in the style exemplified by the painting?

    (A) Georgia O'Keeffe
    (B) Georges Braque
    (C) Emil Nolde
    (D) Salvador Dalí

© 2014 The College Board.
Visit the College Board on the Web: www.collegeboard.org.

QUESTIONS 29-35: IMAGE

© 2013 Estate of Artist / Artists Rights Society (ARS), New York / Digital Image
© The Museum of Modern Art / Licensed by SCALA /Art Resource, NY

END OF PART A

Answers—Section I, Part A

1-C, 2-A, 3-C, 4-C, 5-B, 6-B, 7-A, 8-C, 9-C, 10-B, 11-C, 12-A, 13-A, 14-B, 15-B, 16-B, 17-B, 18-A, 19-C, 20-B, 21-B, 22-A, 23-B, 24-D, 25-B, 26-B, 27-C, 28-C, 29-A, 30-B, 31-B, 32-D, 33-C, 34-B, 35-B

© 2014 The College Board.
Visit the College Board on the Web: www.collegeboard.org.

ART HISTORY
SECTION II—Part A
Time—1 hour
2 Questions

Directions: You have one hour to answer the two questions in this part, and you are advised to spend 30 minutes on each question. The proctor will announce when each 30-minute interval has elapsed, but you may proceed freely from Question 1 to Question 2. Do NOT go on to Part B or open the orange booklet for Section II: Free Response, Part B, Images, until you are told to do so.

Read the questions carefully and take time to think about what the questions ask. You can receive full credit only by directly answering the questions. Therefore, spend a few minutes organizing or outlining your responses in the blank space provided above the questions. Notes written in the blank space will not be scored. You must answer each question on the lined pages of this booklet. Analyze each question thoroughly and choose appropriate examples for your responses. Identify your examples as fully as possible.

Note: This exam uses the chronological designations B.C.E. (before the common era) and C.E. (common era). These labels correspond to B.C. (before Christ) and A.D. (anno Domini), which are used in some art history textbooks.

1. The creation or representation of landscape (both the natural and/or built environment) is a cultural construct. Different cultures use a variety of approaches to create or represent landscape to communicate meaning.

   Select and clearly identify two examples of the creation or representation of landscape, in any medium, from two different cultures. At least one of your choices must come from beyond the European tradition. Using specific evidence for each of your examples, analyze <u>both</u> how that landscape is created or represented <u>and</u> how that landscape communicates meaning within the culture that produced it. (30 minutes)

2. Since the 1960s many artists have investigated issues of identity in their work. Their investigations relate to larger cultural concerns.

   Select and clearly identify two such works made between 1960 C.E. and the present. The works must be by two different artists; the works may be in any media. Using specific evidence, analyze <u>both</u> how each artist investigates issues of identity in the work <u>and</u> how each investigation relates to larger cultural concerns. (30 minutes)

STOP

IF YOU FINISH BEFORE TIME IS CALLED,
YOU MAY CHECK YOUR WORK ON QUESTIONS 1 AND 2.

DO NOT GO ON TO PART B OR OPEN THE ORANGE BOOKLET
UNTIL YOU ARE TOLD TO DO SO.

© 2014 The College Board.
Visit the College Board on the Web: www.collegeboard.org.

ART HISTORY
SECTION II—Part B
Time—1 hour
6 Questions

Directions: The questions in this part are based on color images and/or text. The corresponding images are shown in the orange booklet for Section II: Free Response, Part B, Images. You have one hour to answer the six questions in this part, and you are advised to spend 10 minutes on each question. The proctor will announce when each 10-minute interval has elapsed, but you may proceed freely from one question to the next. You must answer each question on the lined pages in the exam booklet.

Read the questions carefully and take time to think about what the questions ask. Formulate your answers before you begin to write. You can receive full credit only by directly answering the questions.

Note: For questions involving two images, when you are not asked specifically to name the artists and/or titles of the works, you may refer to the work on the left as (L) and the work on the right as (R).

© 2014 The College Board.
Visit the College Board on the Web: www.collegeboard.org.

3. The work on the left is Archaic. The work on the right is late Classical. The two works exemplify changes in the representation of the female form in ancient Greek art.

   Using specific evidence from both works, compare and contrast the two works to analyze both how and why changes occurred in the representation of the female form in ancient Greek art. (10 minutes)

LEFT IMAGE

© Gianni Dagli Orti / The Art Archive at Art Resource, NY

© 2014 The College Board.
Visit the College Board on the Web: www.collegeboard.org.

RIGHT IMAGE

© Nimatallah / Art Resource, NY

© 2014 The College Board.
Visit the College Board on the Web: www.collegeboard.org.

4. The images show a plan and a view of the early Christian mausoleum known as Santa Costanza.

   Using specific visual evidence, analyze both how the building's design served its original function and how its design incorporates elements from earlier building types. (10 minutes)

LEFT IMAGE

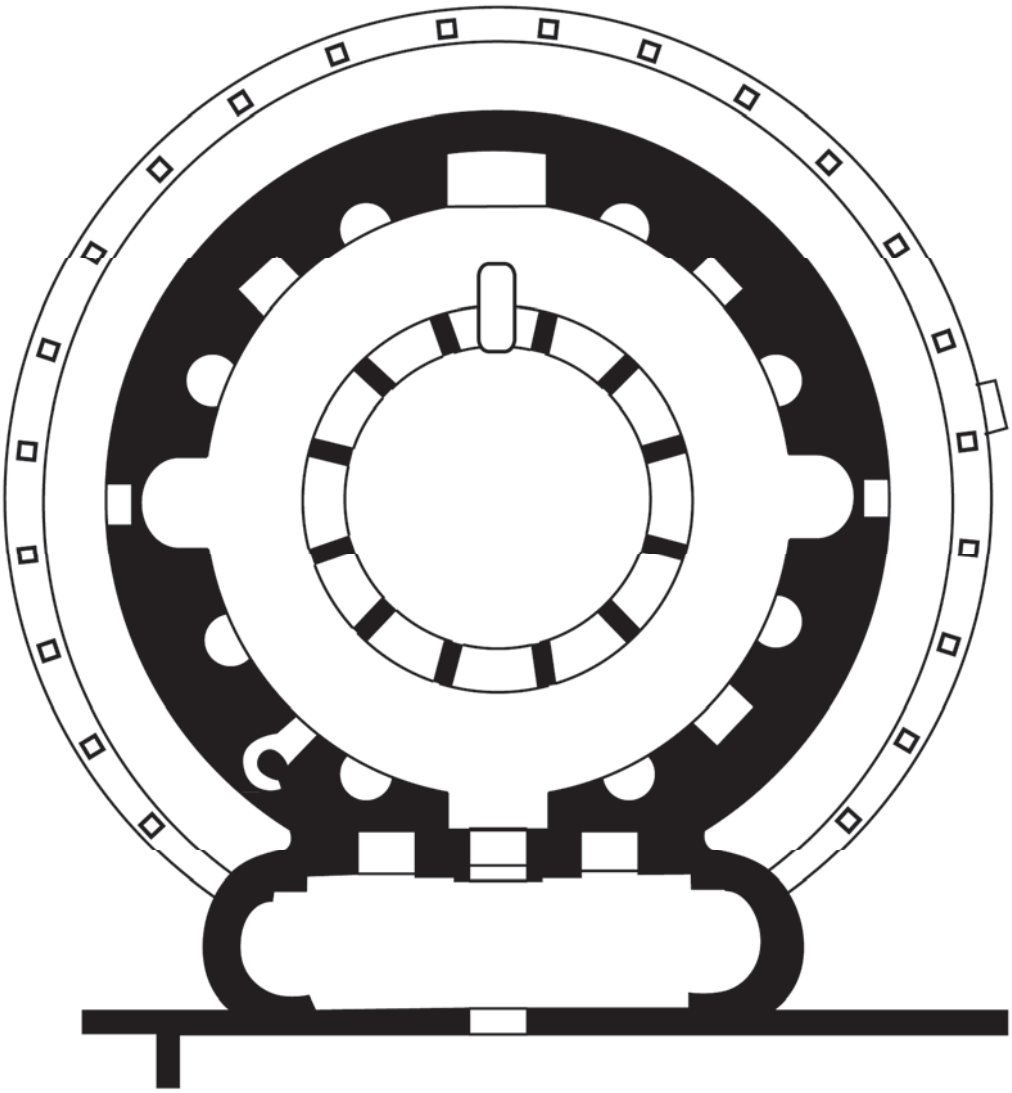

© 2014 The College Board.
Visit the College Board on the Web: www.collegeboard.org.

RIGHT IMAGE

© Scala / Art Resource, NY

© 2014 The College Board.
Visit the College Board on the Web: www.collegeboard.org.

5. Attribute the painting to the artist who painted it. Justify your attribution by discussing specific characteristics of the painting that are commonly associated with the work of that artist. (10 minutes)

© Metropolitan Museum of Art, New York, USA / The Bridgeman Art Library

© 2014 The College Board.
Visit the College Board on the Web: www.collegeboard.org.

6. The images show a plan and a view of the pyramid complex at Giza.

   Using specific evidence, analyze how the pyramid complex was shaped by both the beliefs and the practices of the culture that built it. (10 minutes)

LEFT IMAGE

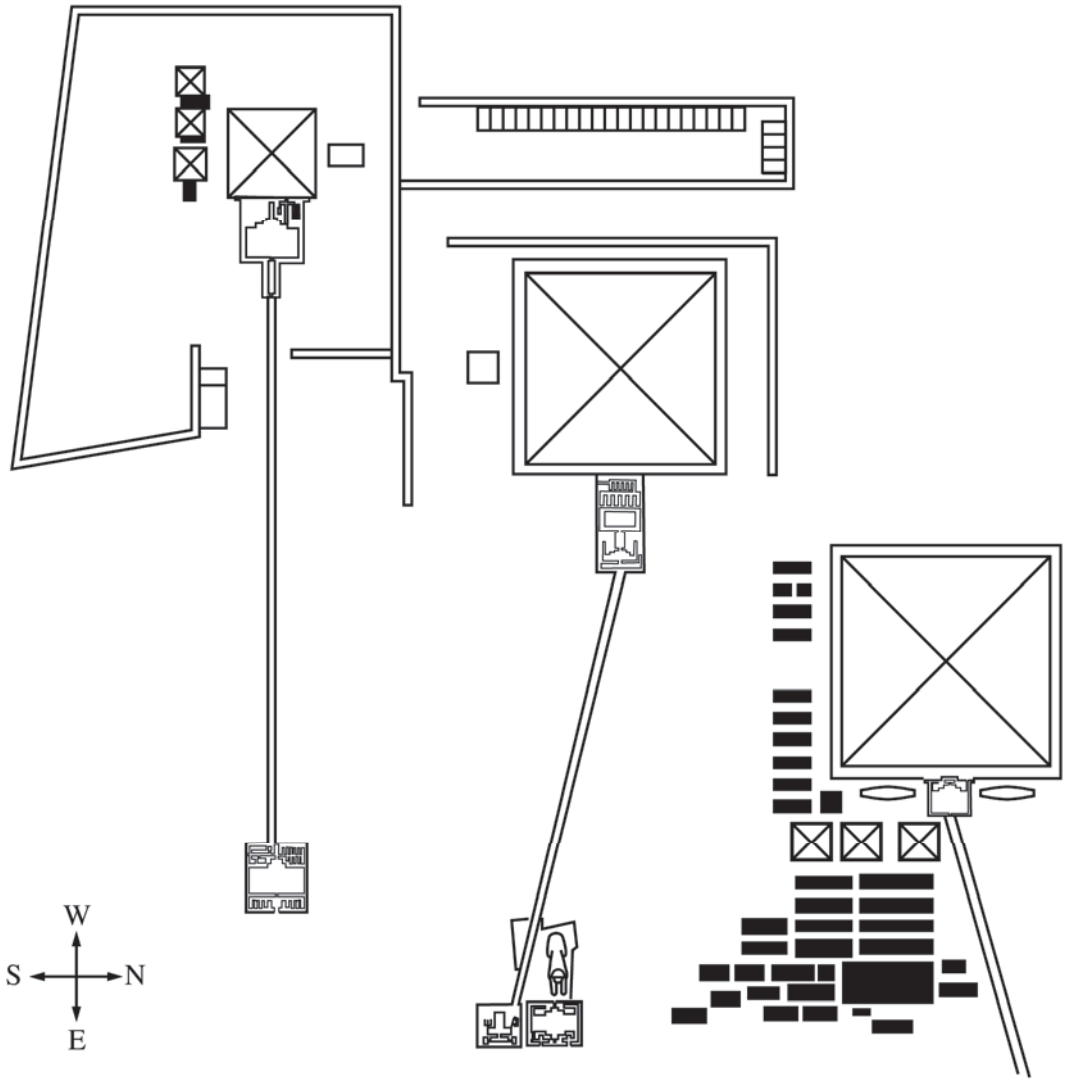

© 2014 The College Board.
Visit the College Board on the Web: www.collegeboard.org.

RIGHT IMAGE

© B. Anthony Stewart / National Geographic Society / Corbis

© 2014 The College Board.
Visit the College Board on the Web: www.collegeboard.org.

7. The photograph shown was taken by Dorothea Lange.

   Analyze how and why Lange's photograph was purposefully composed to convey meaning to a general public. (10 minutes)

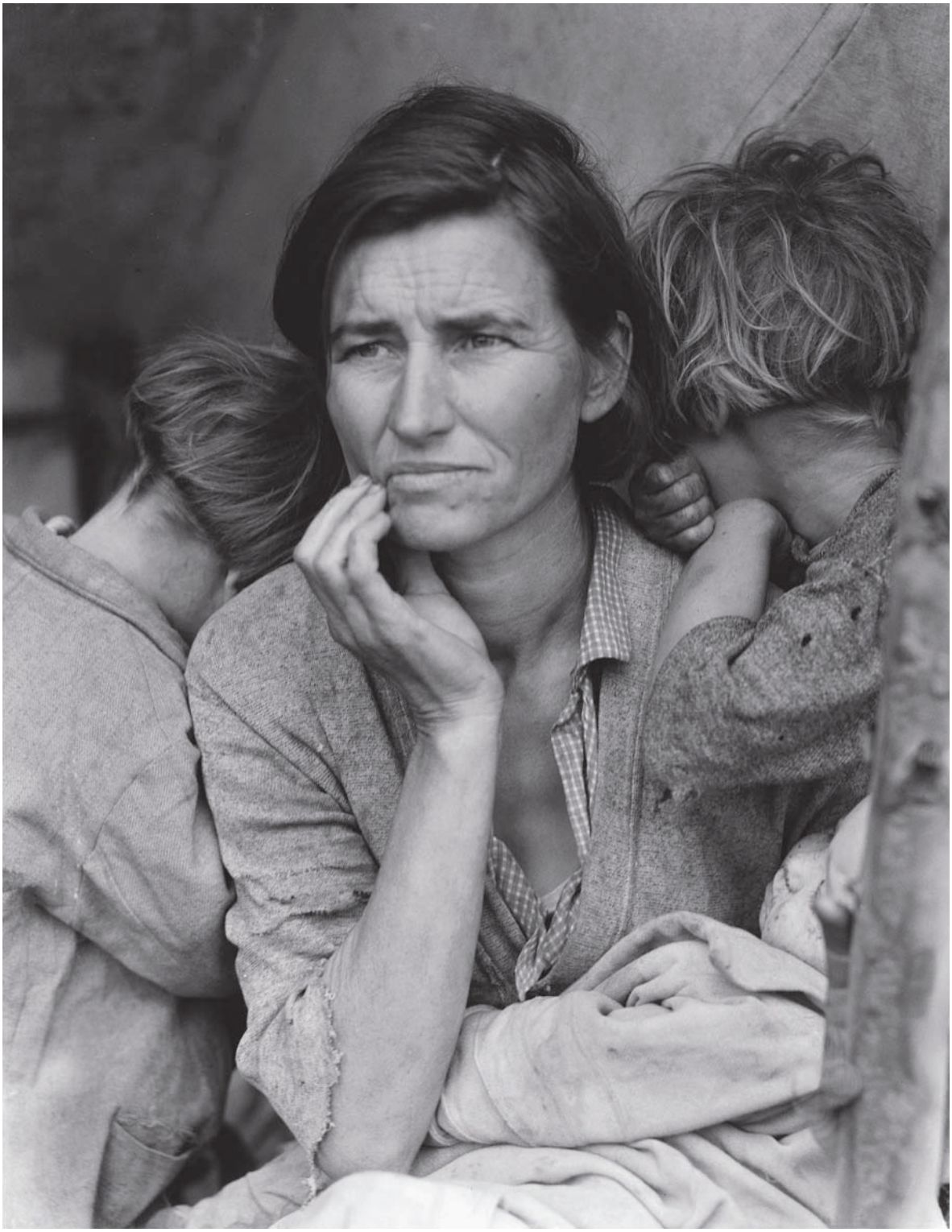

© Courtesy of Library of Congress # LC-DIG-fsa-8b29516

© 2014 The College Board.
Visit the College Board on the Web: www.collegeboard.org.

8. The painter Jacques-Louis David made the following statement to his pupils in speaking of the work shown, *The Battle of the Sabines*.

   "I want to work in the pure Greek style. I feed my eyes on antique statues, I even have the intention of imitating some of them. The Greeks had no scruples about copying a composition, a gesture, a type that had already been accepted and used. They put all their attention and all their art on perfecting an idea that had already been conceived."

   With which art-historical movement is David associated? Making specific reference to the quotation and to the work shown, analyze how both reflect the ideals of this art-historical movement. (10 minutes)

© The Gallery Collection / CORBIS # 42-18371956

STOP

END OF EXAM

© 2014 The College Board.
Visit the College Board on the Web: www.collegeboard.org.